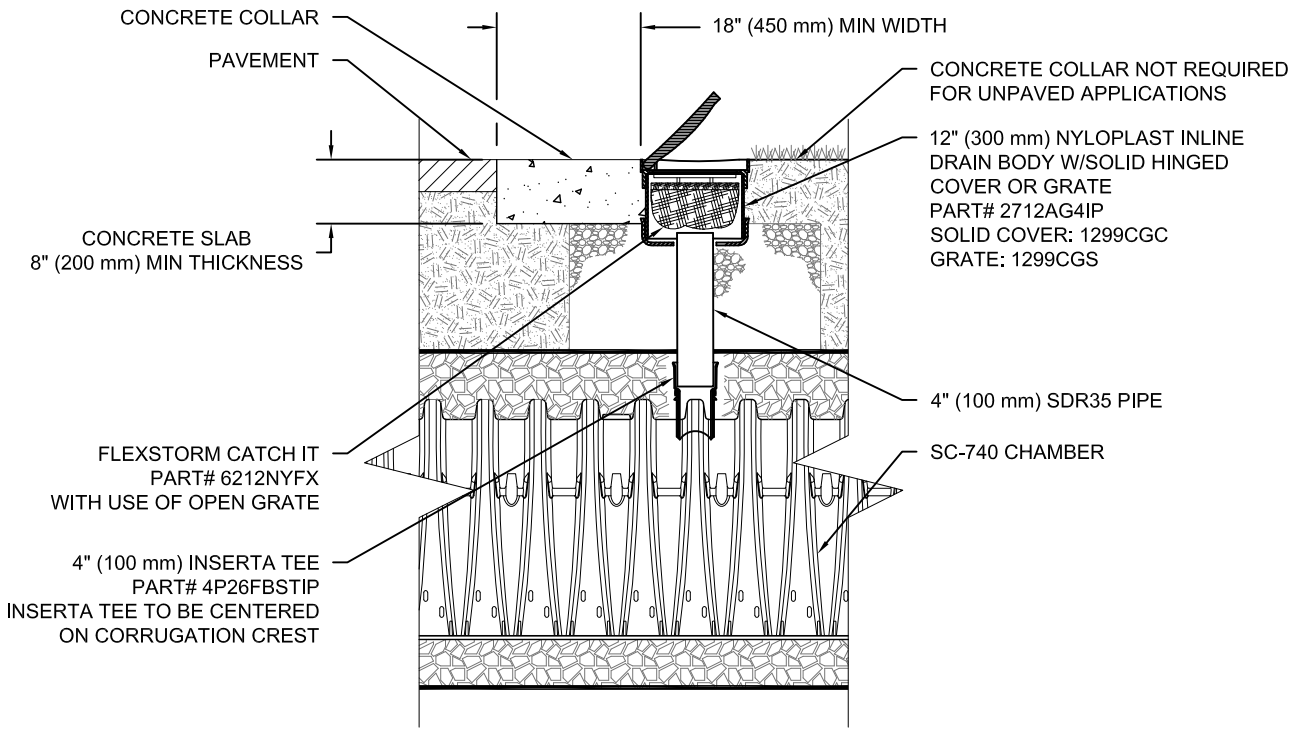

SC-740 4" INSPECTION PORT DETAIL

NTS